Index

Page	Schematics Page Name
01	Cover Sheet / Revision History
02	Connector
03	XMC4200_Debug
04	XMC4400
05	ICs_and_Power

01_Revision_History.SchDoc

Revision History

Rev.	Rel.	Date	Author	Description	Page(s)
1.0	RC01	2019/Aug	RB	Initial Version	
1.1	**Rel**	**2019/Oct**	**RB**	**Released Version**	

Platform2GO XMC4400 V1.1

[No Variations]

V1.1

Infineon Technologies AG
IFAG DES TCP EDS
Am Campeon 1-15, Munich

03/2019

Preliminary
Open

LEGAL DISCLAIMER
THE INFORMATION GIVEN IN THIS DOCUMENT IS GIVEN FOR ILLUSTRATING PURPOSES ONLY. THE RECIPIENT OF THIS DOCUMENT MUST VERIFY ANY FUNCTION DESCRIBED HEREIN IN THE REAL APPLICATION. INFINEON TECHNOLOGIES HEREBY DISCLAIMS ANY AND ALL WARRANTIES AND LIABILITIES OF ANY KIND (INCLUDING WITHOUT LIMITATION WARRANTIES OF NON-INFRINGEMENT OF INTELLECTUAL PROPERTY RIGHTS OF ANY THIRD PARTY) WITH RESPECT TO ANY AND ALL INFORMATION GIVEN IN THIS DOCUMENT.

Infineon Technologies AG
IFAG DES TCP EDS
Am Campeon 1-15, Munich

Title	Platform2Go XMC4400-V1		
Variant	[No Variations]	Approved	<Appr.>
Size: A3	Document Name: 01_Revision_History.SchDoc	Rel.: RC02	Rev.: V1.1

Author: R.B.
Date: 26.06.2020 Time: 12:53:51 SVN Revision: da75247807cb30a8ab86d75f81b2

© Infineon Technologies AG 2019. All Rights Reserved.

Pinheader/Arduinopinheader

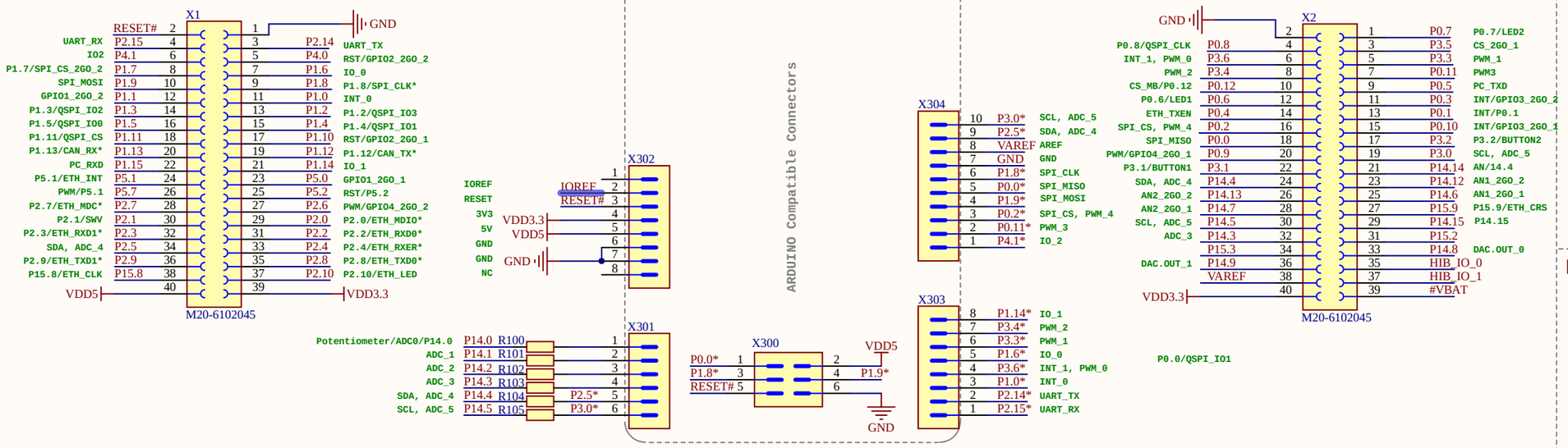

Pin Bridges

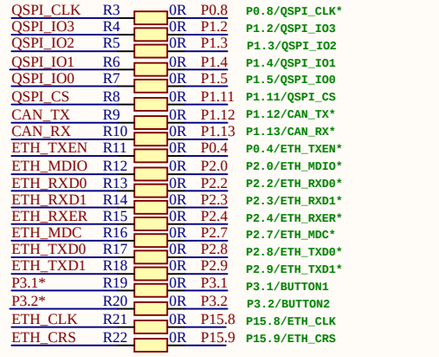

Microbus Connector

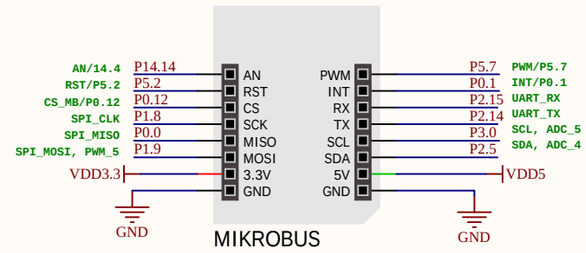

Arduino Level Shifter

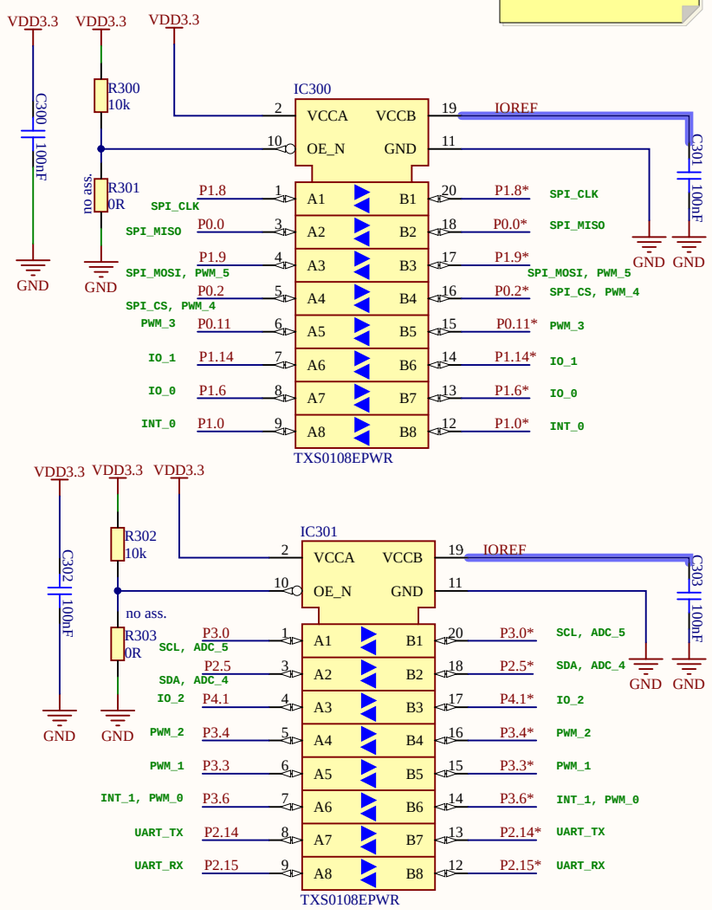

Arduino Level Shifter Bridges

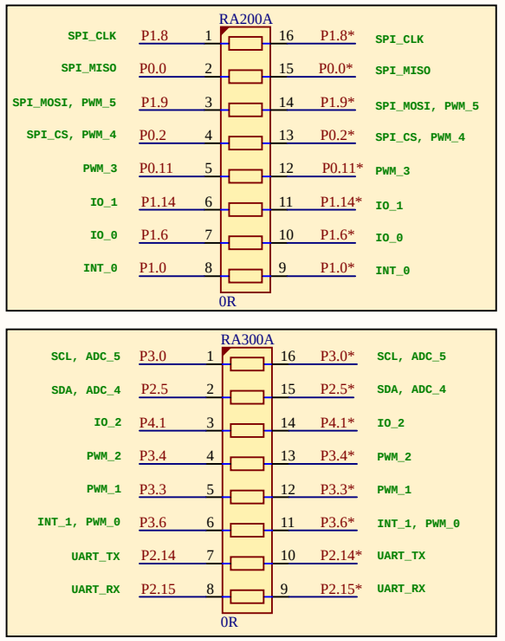

Shield2Go Connector

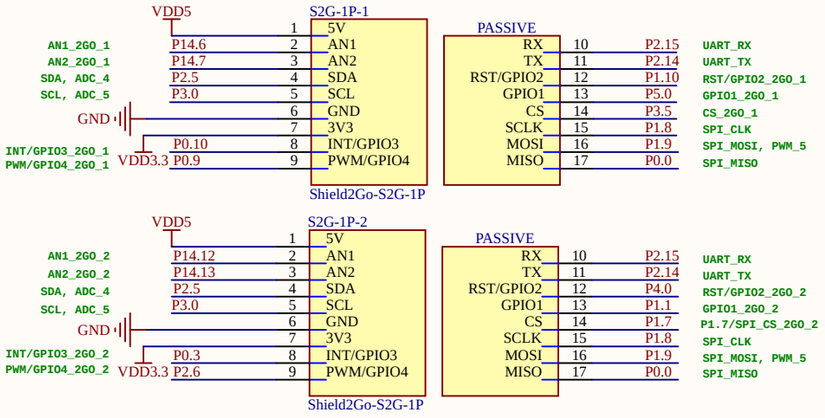

Arduino Level Jumper

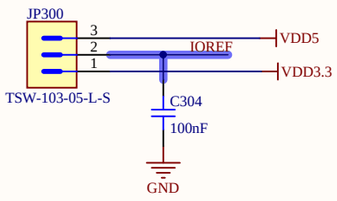

UART Bridges

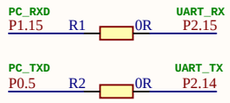

Infineon Technologies AG
IFAG DES TCP EDS
Am Campeon 1-15, Munich

Title	Platform2Go XMC4400-V1		
Variant		Approved	R. B.
Size: A3	Connectors.SchDoc	Rel. Draft	Rev. V1.1
Author: R.B.			
Date: 26.06.2020 Time: 12:53:52		SVN Revision:	da75247807cb30a8ab86d75f81b2
© Infineon Technologies AG 2019. All Rights Reserved.		Sheet 2	of 5

Debug Micro-USB Connector

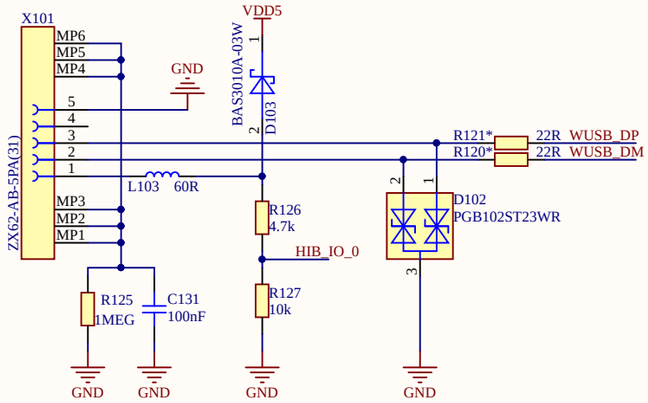

On-board Debugger

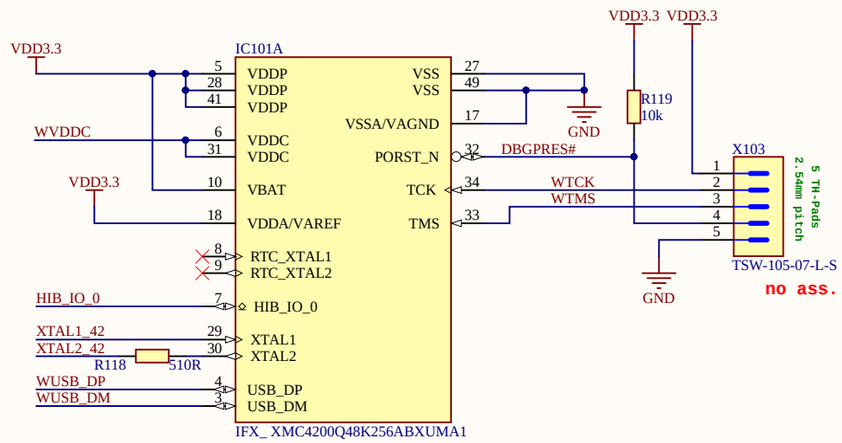

Caps of XMC4200

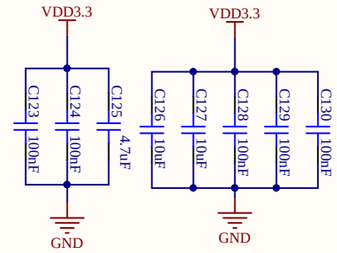

LED

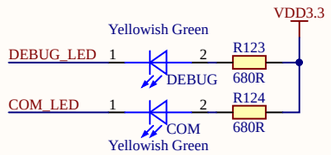

Clock

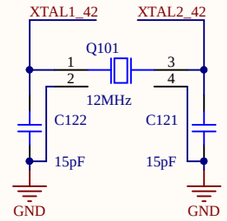

qSPI Flash

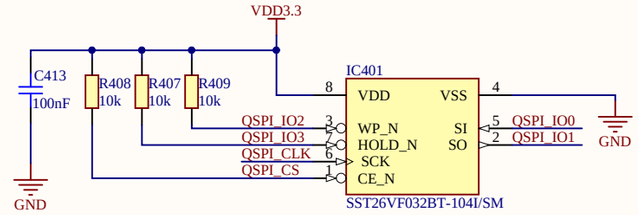

Ethernet

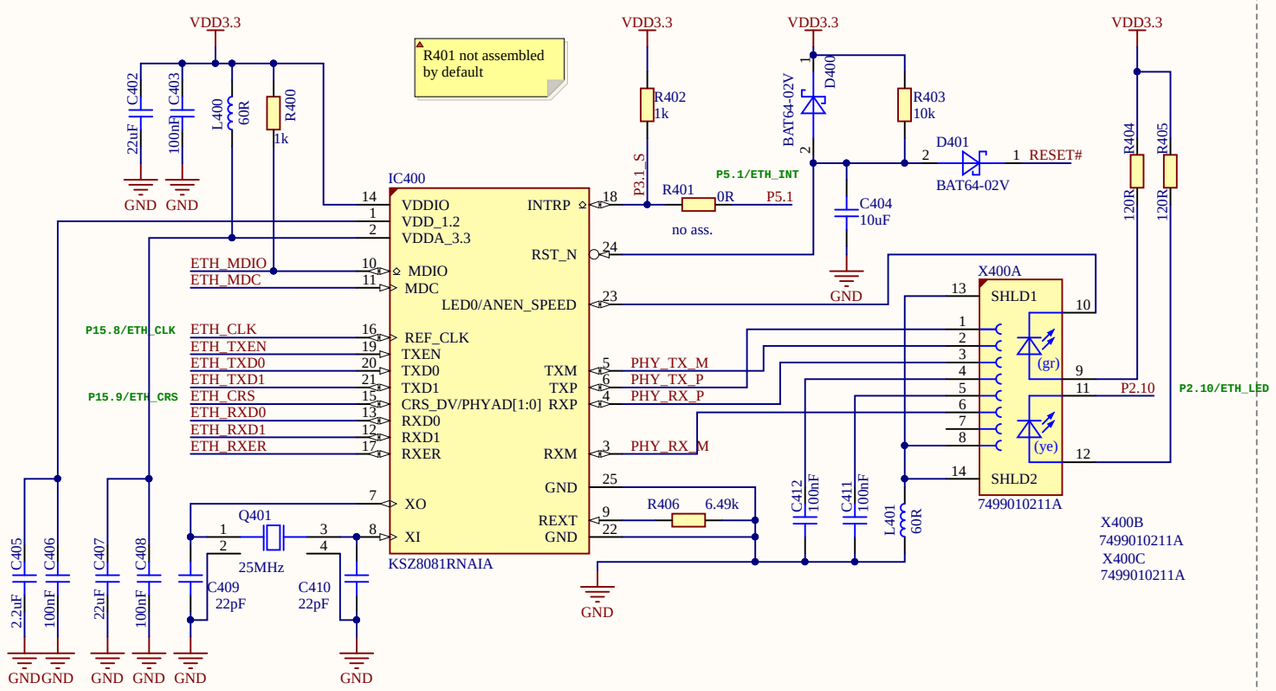

Cortex Debug

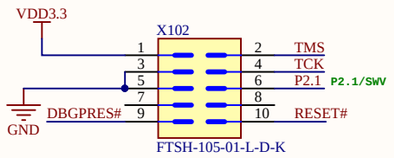

On-board Debugger Concept

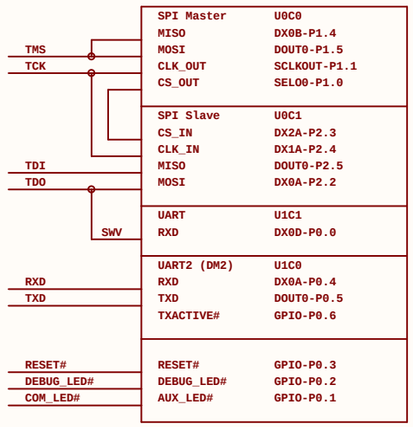

Infineon Technologies AG
IFAG DES TCP EDS
Am Campeon 1-15, Munich

Title	Platform2Go XMC4400-V1		
Variant		Approved	R. B.
Size: A3	XMC4200_Debug.SchDoc	Rel. Draft	Rev. V1.1
Author: R.B.			
Date: 26.06.2020 Time: 12:53:52	SVN Revision: da75247807cb30a8ab86d75f81b3		
© Infineon Technologies AG 2019. All Rights Reserved.	Sheet 3 of 5		

USB Connector

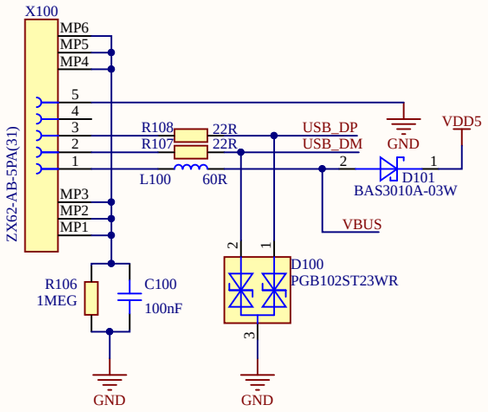

Microcontroller XMC4400

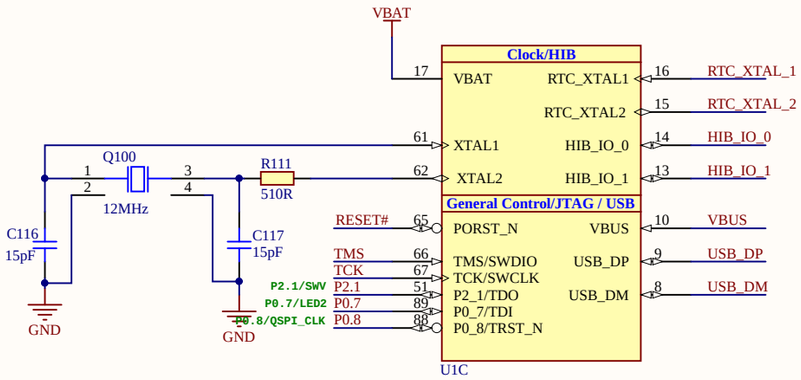

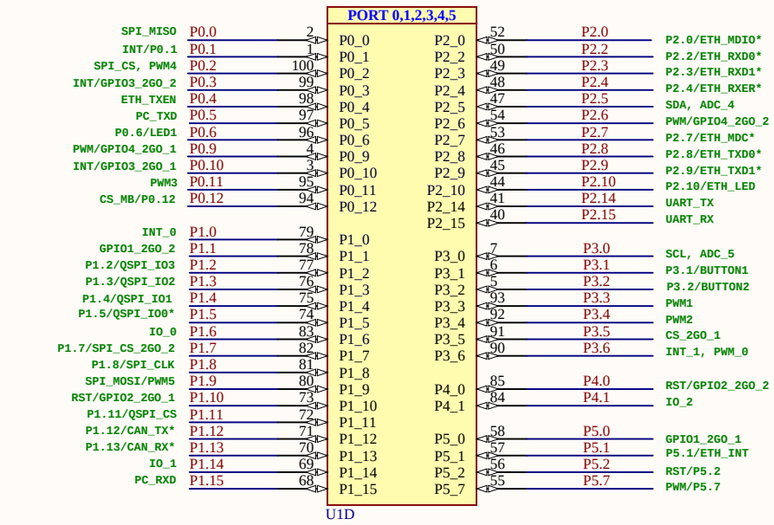

Power of XMC4400

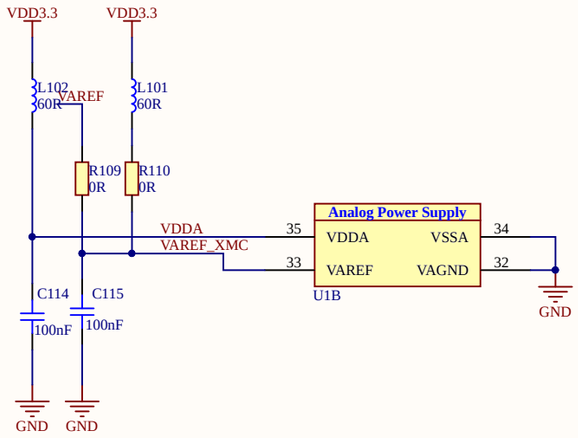

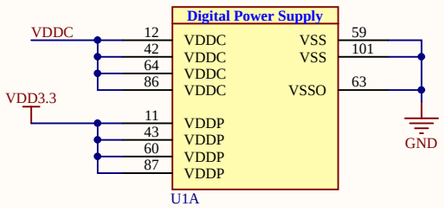

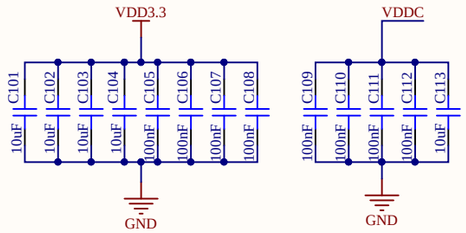

Potentiometer

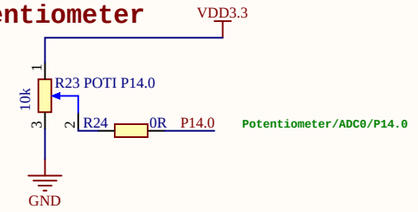

Buttons & LEDs

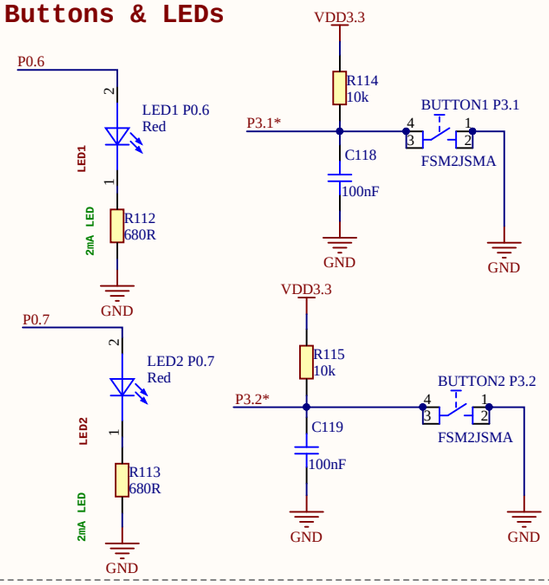

Reset

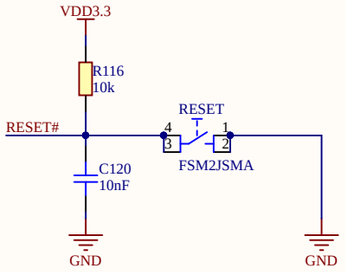

RTC Crystal

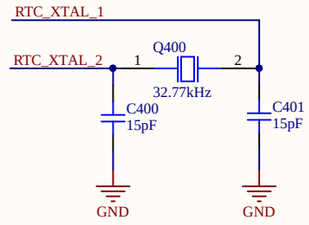

Infineon Technologies AG IFAG DES TCP EDS Am Campeon 1-15, Munich	
Title	Platform2Go XMC4400-V1
Variant	Approved: R. B.
Size: A3 — XMC4400.SchDoc	Rel.: Draft — Rev.: V1.1
Author: R.B.	
Date: 26.06.2020 Time: 12:53:53	SVN Revision: da75247807cb30a8ab86d75f81b3
© Infineon Technologies AG 2019. All Rights Reserved.	Sheet 4 of 5

CAN Transceiver

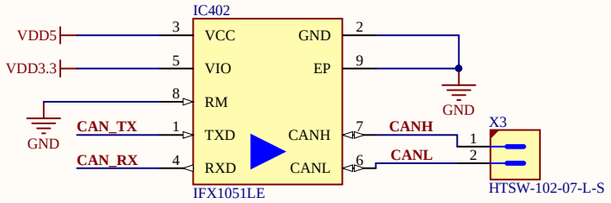

RTC Battery

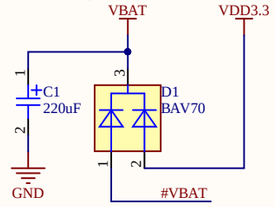

Power Target Device

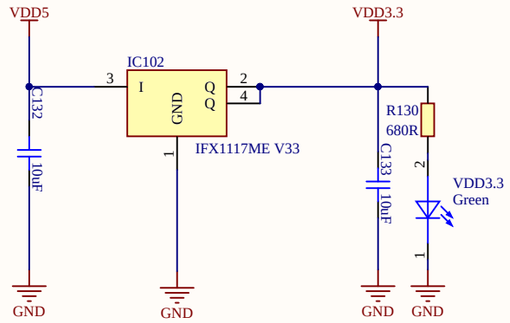

Infineon Technologies AG **IFAG DES TCP EDS** Am Campeon 1-15, Munich			
Title: Platform2Go XMC4400-V1			
Variant		Approved: R. B.	
Size: A3	ICs_and_Power.SchDoc	Rel.: Draft	Rev.: V1.1
Author: **R.B.**			
Date: 26.06.2020 Time: 12:53:53	SVN Revision: da75247807cb30a8ab86d75f81b3		
© Infineon Technologies AG 2019. All Rights Reserved.	Sheet 5 of 5		